RevNo	Revision note	Date	Signature	Checked

INTERCONNECTION POSSIBILITIES WITH ALARM SYSTEMS

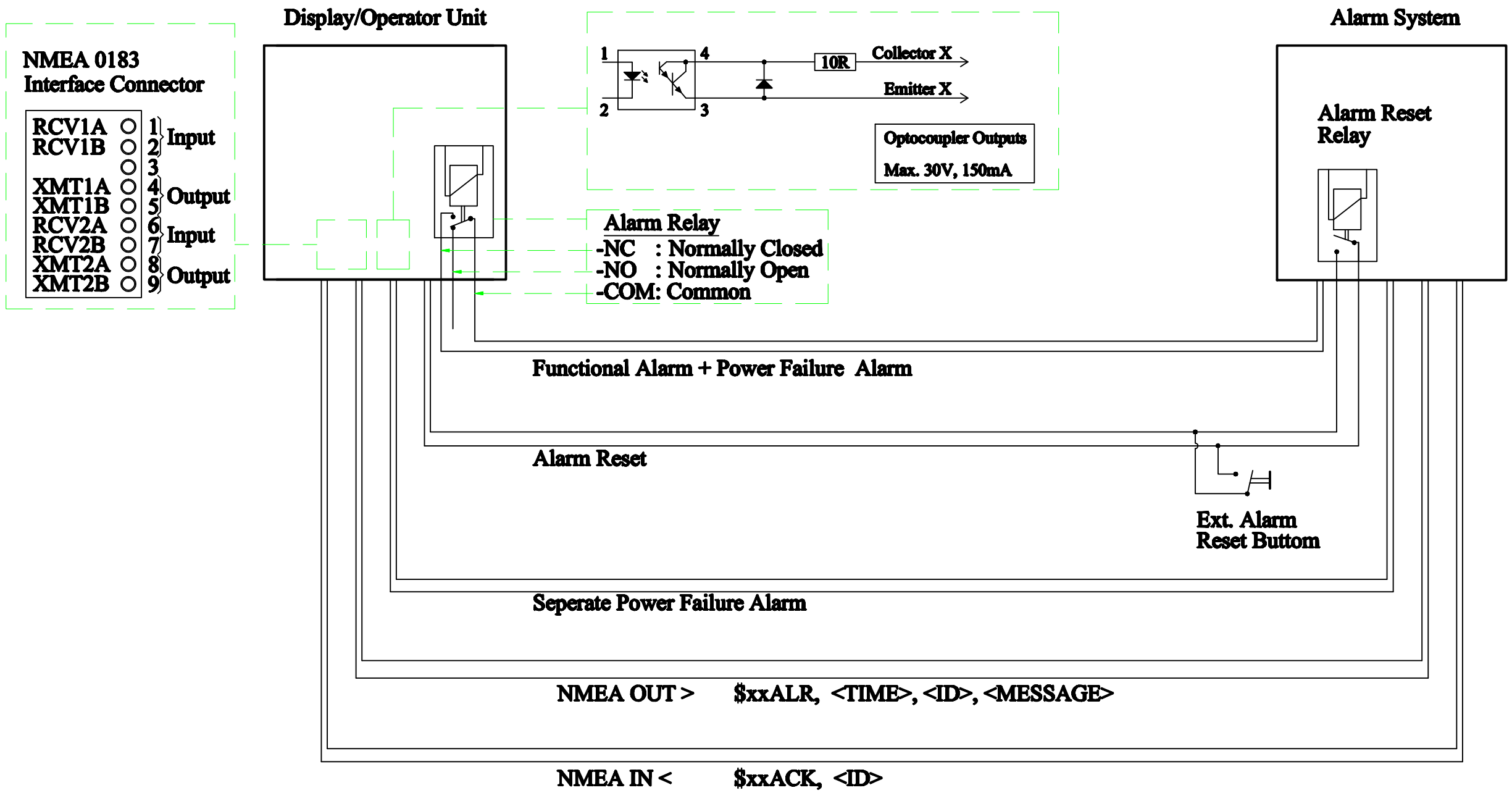

Itemref	Quantity	Title/Name, designation, material, dimension etc			Article No./Reference	
Designed by A.Matre		Checked by XXX	Approved by - date XXX - 00/00/00	File name XXX	Date 2007.22.30	Scale
SKIPPER Electronics A/S			Interconnection possibilities with Alarm Systems			
			SC-2038-Rev-00		Edition 0	Sheet 1/1